Fitting Rodgers Tuners

String rollers with bearing bushes

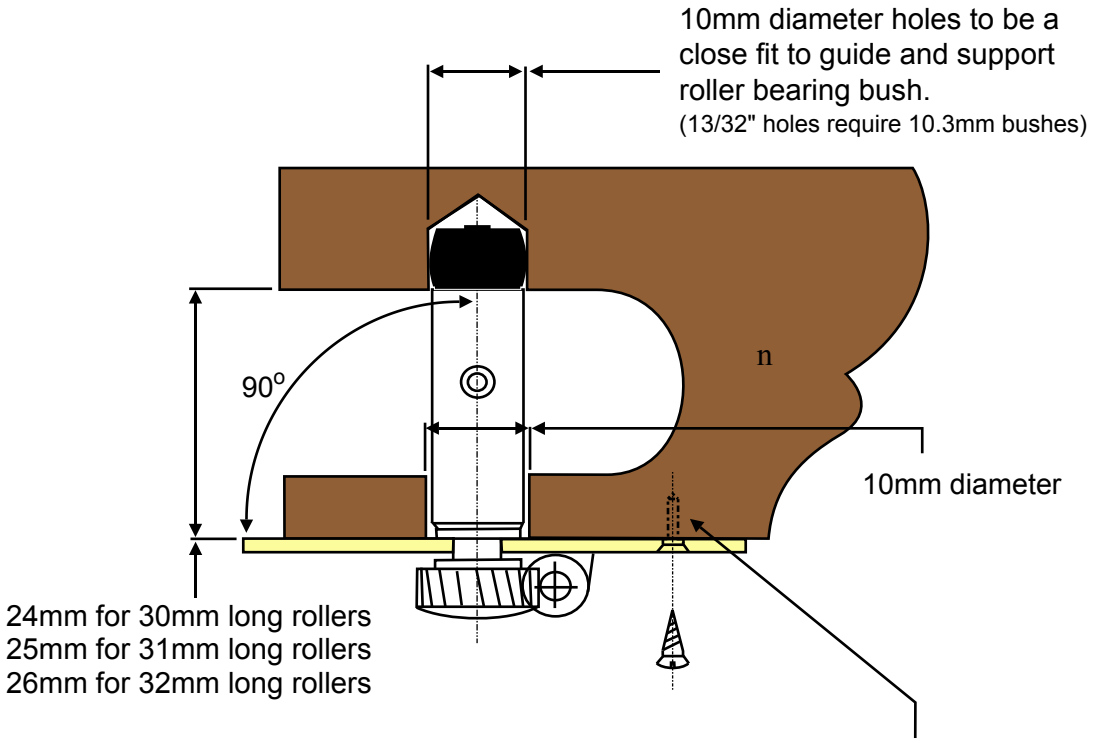

Before inserting woodscrews, drill pilot holes 1.5mm diameter x 5mm deep. Apply a small amount of ordinary hand soap or wax polish to the thread of the screws to assist easy fitting.
These precautions will ensure that the screws enter accurately without risk of damaging the screws or splitting the wood